HEAT TREATMENT AND FINAL FINISH
PHOSPHATE BLACK STANDARD PIN

PHYSICAL PROPERTIES	
Y P	
T S	
EL 2	
RED	
BR	
ROCK	
SCL	

OCTOBER 7, 1943

REVISIONS			
1	3-9-44		
2	1-16-45		
3	6-12-45		

DRG. PERTAINS TO	
51-125	30 B.M.G. M1919A6
51-10	30 B.M.G.-M1917A1
51-83	30 B.M.G.-M1919A4 (FXD.)
51-84	30 B.M.G.-M1919A4 (FLEX)
51-114	30 B.M.G.-M1919A5

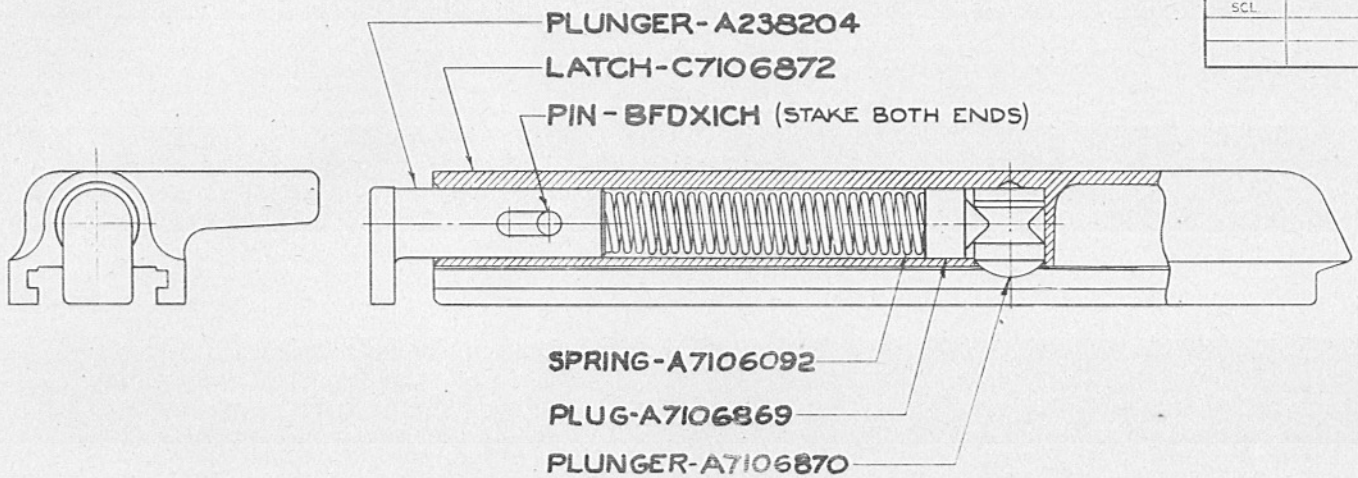

LATCH, ASSEMBLY 7106949

SUPERSEDES C64247 AND C64280
WITH CHANGE 6-12-45

0 1 2 IN.

B 7106949

TOLERANCE ON DIMENSIONS NOT OTHERWISE SPECIFIED
DECIMAL ——
FRACTIONAL ——
ANGULAR ——

L.M.D. W.B.H. AHR

SUBMITTED: AHRoe

APPROVED BY ORDER OF THE CHIEF OF ORDNANCE
CAPT. ORD. DEPT. U.S.A.

ORDNANCE DEPT., U. S. A.

HEAT TREATMENT & FINAL FINISH	PHYSICAL PROPERTIES						JUNE 3, 1943
HEAT TREAT	Y. P.		RED.		SCL		REVISIONS
	T. S.		BR.		C.C.	.005-.010 DEEP	2 3-9-44
FINISH TYPE II CLASS B	E. L. 2		ROCK				3² 1-16-45
							4' 6-12-45

DRG. PERTAINS TO

B7106949	LATCH, ASS'Y.
51-125	.30 BMG-M1919A6
51-10	.30 B.M.G-M1917A1
51-83	.30 B.M.G-M1919A4 (FXD)
51-84	.30 B.M.G-M1919A4 (FLEX)
51-114	.30 B.M.G.-M1919A5

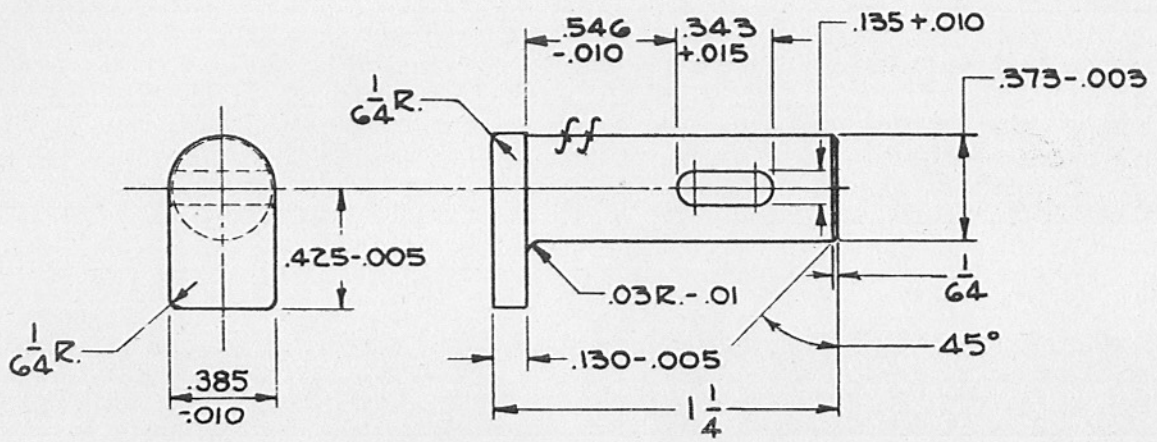

TOLERANCE ON DIMENSIONS NOT OTHERWISE SPECIFIED
DECIMAL —
FRACTIONAL 1/64
ANGULAR 5°

DRAFTSMAN	TRACER	L'D'G DRAFTSMAN
Hug.	Hug.	HMR
CHECKER		CHIEF DRAFTSMAN
Hug.		

SUBMITTED: A. W. Roe

APPROVED BY ORDER OF THE CHIEF OF ORDNANCE
Geo. L. Kuhn
CAPT. ORD DEPT U.S.A.

ORDNANCE DEPT., U. S. A.

PLUNGER, LATCH

STEEL WDX1020

FINISH "f"

A238204

SCALE 2/1

A238204

HEAT TREATMENT & FINAL FINISH	PHYSICAL PROPERTIES					
DRAW AT 450°F	Y. P.		RED.		SCL.	
	T. S.		BR.			
	EL 2		ROCK			

MARCH 9, 1944

REVISIONS

1'	6-12-45		

DRG. PERTAINS TO	
B7106949	LATCH ASSY.
51-125	.30 BMG-M19A6
51-10	.30 B.M.G.-M1917A1
51-83	30 B.M.G.-M1919A1
51-84	30 B.M.G.-M1919A4 (FLEX)
51-114	30 B.M.G.-M1919A5

DIAMETER OF WIRE	.045
TOTAL NO. OF COILS	27
OUTSIDE DIAMETER, FREE	.345
MAX. O.D. AT MIN. OPERATING HEIGHT	.360
FREE LENGTH	2.8125
TYPE OF ENDS	SQ. & GD.
WOUND	R.H. OR L.H.
MEAN ASSEMBLED HEIGHT	1.640
LOAD AT MEAN ASSEMBLED HEIGHT	10. ± 1. LB.
MINIMUM OPERATING HEIGHT	1.437
LOAD AT MIN. OPERATING HEIGHT	11.7 ± 1. LB.
LBS. PER INCH OF SPRING DEFLECTION	8.5
SPRING FUNCTIONS IN HOLE	.378 + .003
CALCULATED MAXIMUM SOLID HEIGHT	1.215

CAUTION: DO NOT COMPRESS SOLID

TOLERANCE ON DIMENSIONS NOT OTHERWISE SPECIFIED
DECIMAL: —
FRACTIONAL: —
ANGULAR: —

DRAFTSMAN	TRACER	L'D'G DRAFTSMAN
W.B.H.	W.B.H.	A.A.R.
CHECKED		CHIEF DRAFTSMAN

SUBMITTED:
A. A. Roe

APPROVED BY ORDER OF THE CHIEF OF ORDNANCE:
Chas. E. Thacker
CAPT. ORD. DEPT. U. S. A.

ORDNANCE DEPT., U. S. A.

SPRING, LATCH (7106092)

SPRING STEEL WIRE WD1085 SPECIAL-CLASS A

A | 7106092

MADE AT ROCK ISLAND ARSENAL

HEAT TREATMENT & FINAL FINISH	PHYSICAL PROPERTIES						OCTOBER 7, 1943
HEAT TREAT	Y P		RED.		SCL		REVISIONS
	T S		BR.		C.C.	.005-.010 DEEP	1 3-9-44
OXIDE BLACK	E. L. 2		ROCK				2' 6-12-45

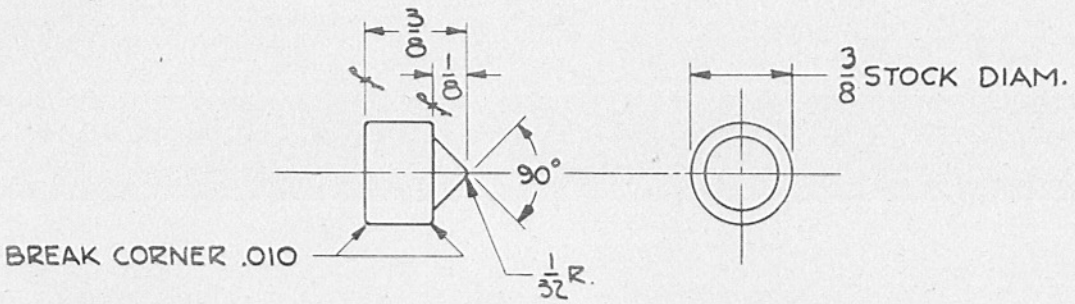

PLUG, RETAINING

STEEL WD1020

FINISH "ff"

7106869

SCALE 2/1

A7106869

DRG. PERTAINS TO

B7106949	LATCH, ASS'Y.
51-125	30 B.M.G.-M1919A6
51-10	30 B.M.G.-M1917A1
51-83	30 B.M.G.-M1919A4 (FXD)
51-84	30 B.M.G.-M1918A4 (FLEX)
51-114	30 B.M.G.-M1919A5

TOLERANCE ON DIMENSIONS NOT OTHERWISE SPECIFIED
DECIMAL .005
FRACTIONAL 1/64
ANGULAR 1°

DRAFTSMAN	TRACER	L'D'G DRAFTSMAN
CHECKED		CHIEF DRAFTSMAN

SUBMITTED:

A. M. Roe

APPROVED BY ORDER OF THE CHIEF OF ORDNANCE

Geo. L. Unmacht

CAPT. ORD DEPT. U. S. A.

ORDNANCE DEPT., U. S. A.

HEAT TREATMENT & FINAL FINISH	PHYSICAL PROPERTIES					
HEAT TREAT	Y. P.		RED.		SCL.	
	T. S.		BR.		C.C.	.005-.010 DEEP
OXIDE BLACK	E. L. 2		ROCK			

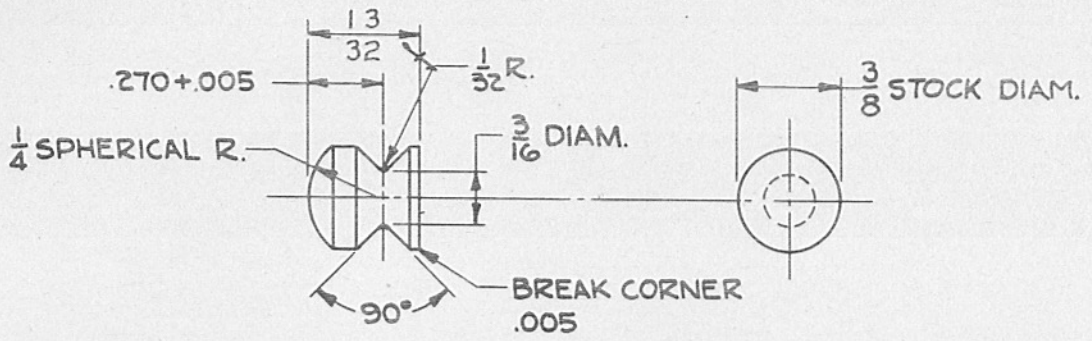

PLUNGER, FRICTION

STEEL WD1020

FINISH "ff"

7106870

SCALE 2/1

A7106870

OCTOBER 7, 1943

REVISIONS				
1	3-9-44			
2'	6-12-45			

DRG. PERTAINS TO	
B7106949	LATCH, ASS'Y.
51-125	.30 B.M.G.-M1919A6
51-10	.30 B.M.G.-M1917A1
51-83	.30 B.M.G.-M1919A4 (FXD)
51-84	.30 B.M.G.-M1919A4 (FLEX)
51-114	.30 B.M.G.-M1919A5

TOLERANCE ON DIMENSIONS
NOT OTHERWISE SPECIFIED
DECIMAL ± .005
FRACTIONAL ± 1/64
ANGULAR ± 1°

DRAFTSMAN	TRACER	L'D'G DRAFTSMAN
Nug.	Nug.	AMR.
CHECKED Nug.	O.O.	CHIEF DRAFTSMAN

SUBMITTED:
A.M. Roe

APPROVED BY ORDER OF THE CHIEF OF ORDNANCE
Chas L. Kuhn
CAPT. ORD. DEPT., U. S. A.

ORDNANCE DEPT., U. S. A.

HEAT TREATMENT AND FINAL FINISH
PHOSPHATE BLACK STANDARD PIN

PHYSICAL PROPERTIES	
Y P	
T S	
EL 2	
RED	
BR	
ROCK	
SCL	

OCTOBER 7, 1943

REVISIONS			
1	3-9-44		
2	1-16-45		
3	6-12-45		

DRG. PERTAINS TO	
51-125	30 B.M.G. M1919A6
51-10	30 B.M.G.-M1917A1
51-83	30 B.M.G.-M1919A4 (FXD.)
51-84	30 B.M.G.-M1919A4 (FLEX)
51-114	30 B.M.G.-M1919A5

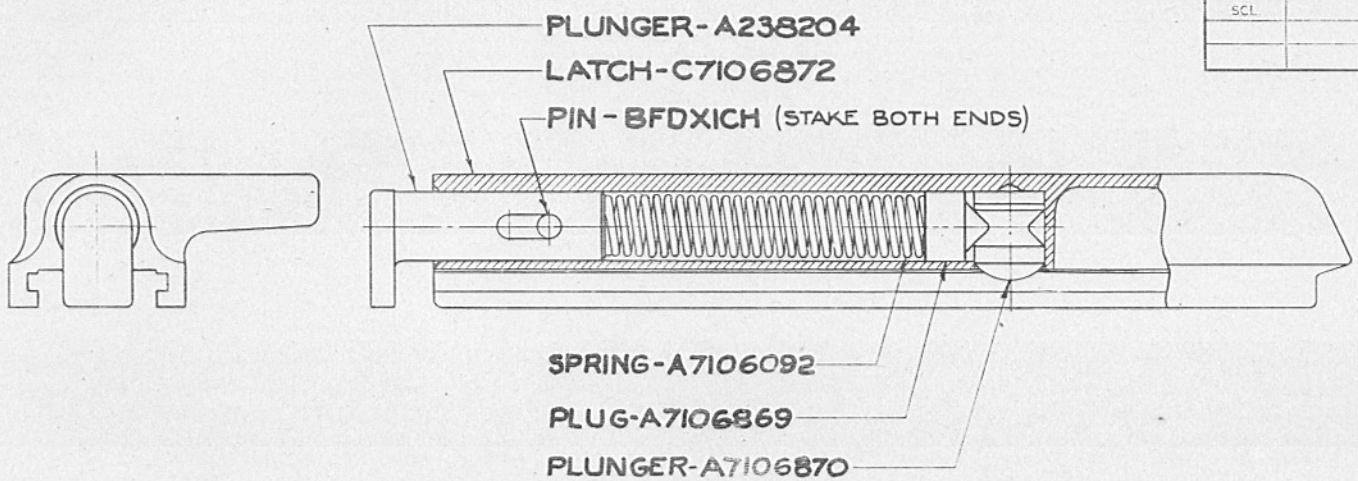

LATCH, ASSEMBLY 7106949

SUPERSEDES C64247 AND C64280
WITH CHANGE 6-12-45

0 1 2 IN.

B 7106949

TOLERANCE ON DIMENSIONS NOT OTHERWISE SPECIFIED
DECIMAL ——
FRACTIONAL ——
ANGULAR ——

L.M.D. W.B.H. AHR

SUBMITTED: AHRoe

APPROVED BY ORDER OF THE CHIEF OF ORDNANCE
CAPT. ORD. DEPT. U.S.A.

ORDNANCE DEPT., U. S. A.

PIN, STRAIGHT, STEEL

BFDX1

ORDNANCE STANDARD (ORDNANCE DESIGN)

H-B-H 1-31-34
APPROVED DATE

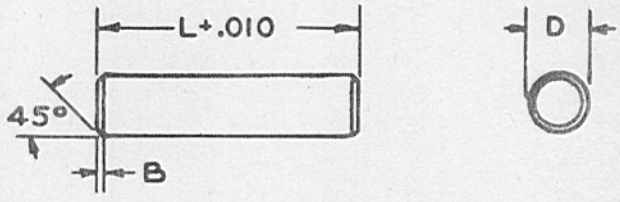

D DIAM. OF PIN	NOM.	1/16	3/32	1/8	5/32	3/16
	MAX.	.0630	.0942	.1255	.1567	.1880
	MIN.	.0620	.0932	.1245	.1557	.1870
B CHAMFER		.010	.010	.010	1/64	1/64

LENGTH -L-	ORDNANCE PART NUMBER PLAIN FINISH					
1/8	505461					
3/16	505462					
1/4	505463	505470				
5/16	505464	505471				
3/8	505465	505472	505481			
7/16	505466	505473	505482			
1/2	505467	505474	505483	505494		
9/16	505468	505475	505484	505495		
5/8	505469	505476	505485	505496	505506	
11/16		505477	505486	505497	505508	
3/4		505478	505487	505498	505509	
13/16		505479	505488	505499	505510	
7/8		505480	505489	505500	505511	
15/16			505491	505501	505512	
1			505492	505502	505513	
1-1/8			505493	505503	505514	
1-1/4				505504	505515	
1-3/8				505505	505516	
1-1/2					505517	
1-5/8					505518	
1-3/4					505519	
	PHOSPHATE COATED					
5/8					505507	
7/8			505490			

MATERIAL: DIMENSIONS IN INCHES.
DRILL ROD, COMMERCIAL. TOLERANCE ON DRILL ROD ±.0005".

EXAMPLE FOR ORDERING: PIN, STRAIGHT, DRILL ROD, 1/8" x 1/2", PLAIN, DRG. BFDX1, PART NO. 505483.

NOTE: PINS SHOULD BE .0005" TO .001" DRIVE FIT.

SUPERSEDES OLD TRACING BFDX1 UNDER REVISION DATE OF 10-10-44

REVISION 4 10-10-44

ENGINEERING ADMINISTRATIVE BRANCH - SPOIP

HEAT TREATMENT AND FINAL FINISH
HEAT TREAT (SEE NOTE)
FINISH TYPE II CLASS B

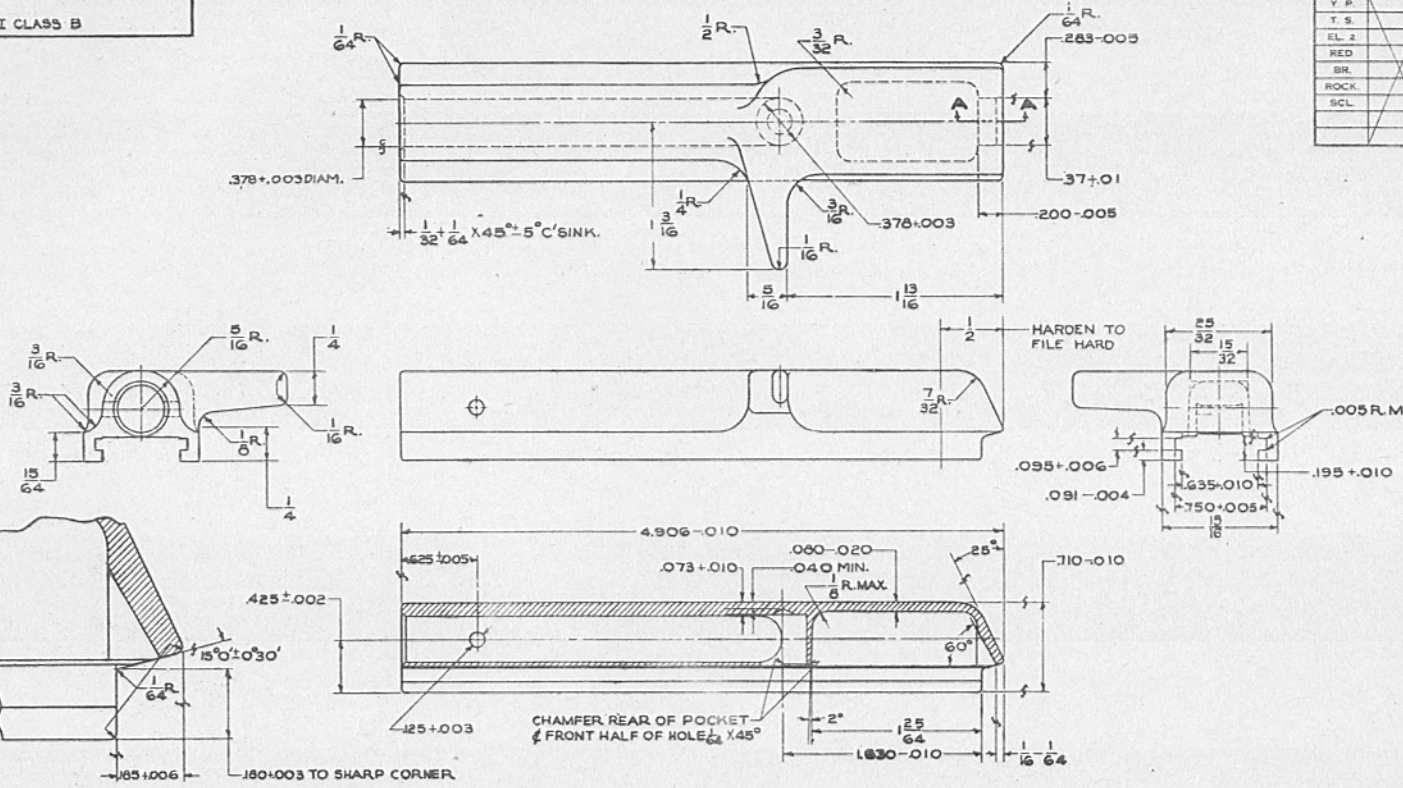

SECTION A-A
SCALE 6/1

LATCH
PEARLITIC MALLEABLE IRON - CLASS A

7106872

PHYSICAL PROPERTIES	
Y. P.	
T. S.	
EL. 2	
RED	
BR.	
ROCK.	
SCL.	

OCTOBER 7, 1943

REVISIONS			
2	3-9-44		
3'	3-27-44		
4'	4-1-44		
5'	1-16-45		
6'	2-16-45		
7'	6-12-45		

DRG. PERTAINS TO	
87106949	LATCH, ASS'Y.
51-125	30B.M.G. M1919A6
51-10	30B.M.G. M1917A1
51-83	30B.M.G. M1919A4
51-84	30B.M.G. M1919A4
51-114	30B.M.G. M1919A5

TOLERANCE ON DIMENSIONS NOT OTHERWISE SPECIFIED
DECIMAL ± —
FRACTIONAL ± 1/64
ANGULAR ± 1°

DRAFTSMAN E. M. W. | TRACER H. S. | L.D.S. DRAFTSMAN H. H. | CHECKER | CHIEF DRAFTSMAN

SUBMITTED: H. H. Roe

APPROVED BY ORDER OF THE CHIEF OF ORDNANCE: CAPT. ORD. DEPT. U.S.A.

SCALE 2/1 | C7106872

ORDNANCE DEPT., U. S. A.